Encoder and Decoder Implementation

Objectives:

1. To understand the working principle of encoder and decoder circuits and how they convert information between different binary formats.
2. To design and implement encoder and decoder circuits using logic gates and verify their operation using truth tables.

Basic Theory:

1. Decoder:

A Decoder is a logic circuit that accepts a set of inputs that represents a binary number and activates only the output that corresponds to the input number.

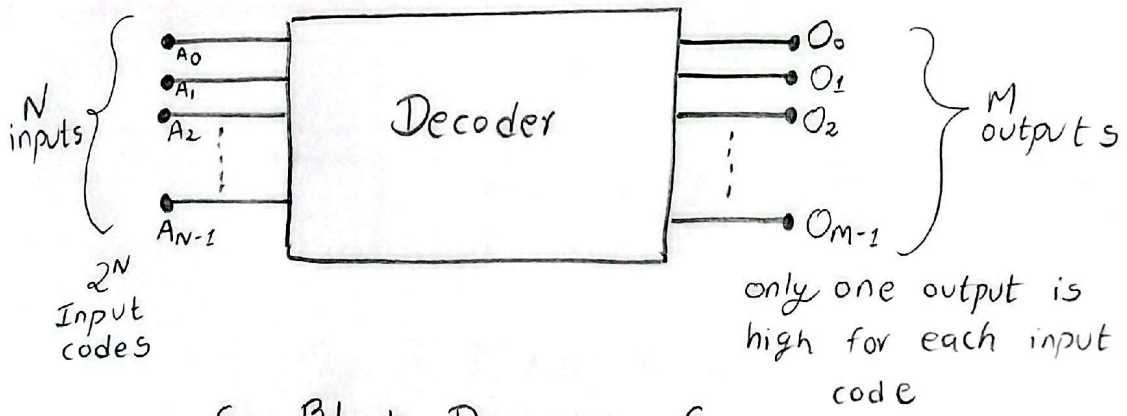

fig. Block Diagram of Decoder

Logic Diagram:

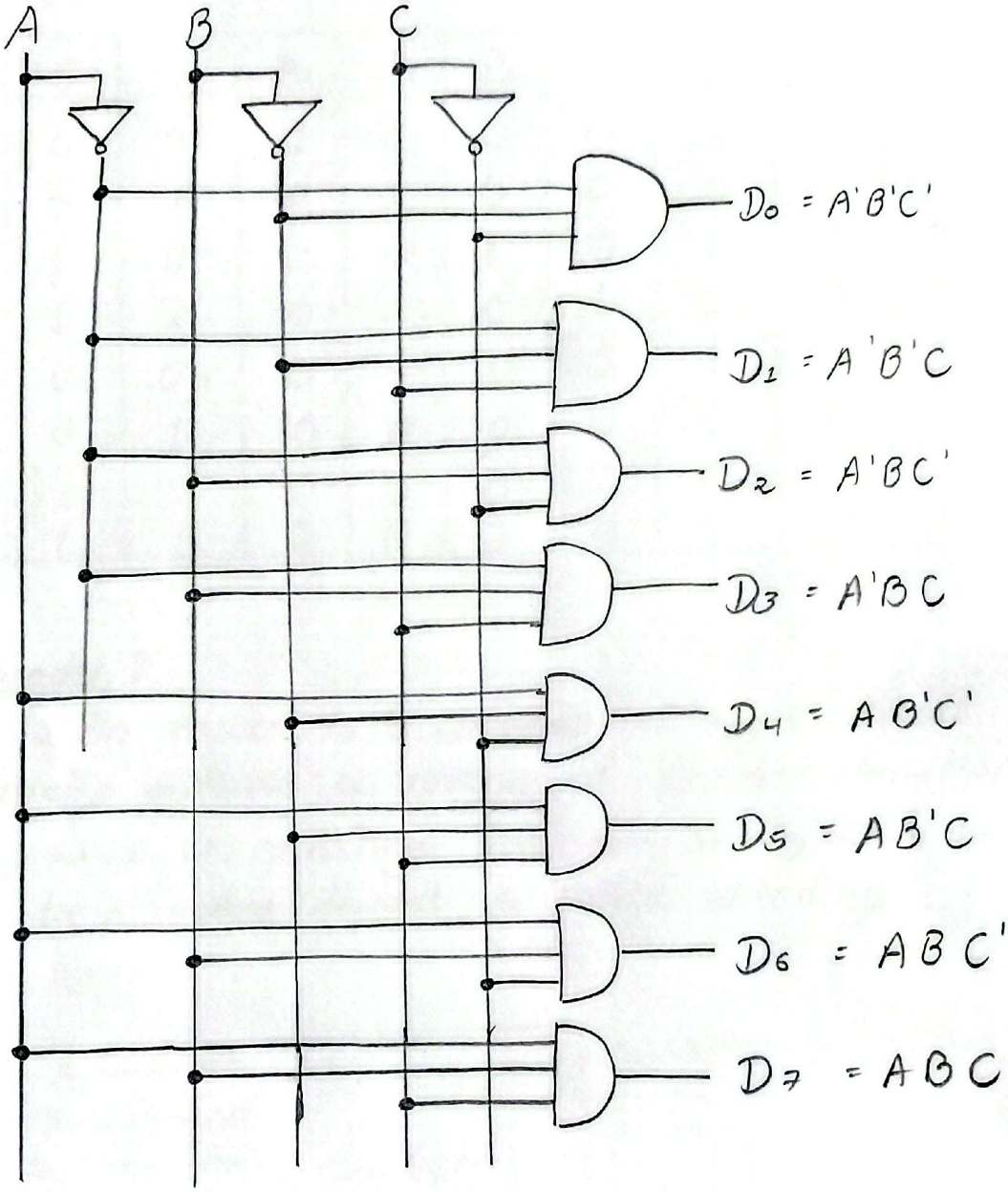

fig. 3-8 line decoder

Truth Table:

A	B	C	D_0	D_1	D_2	D_3	D_4	D_5	D_6	D_7
0	0	0	1	0	0	0	0	0	0	0
0	0	1	0	1	0	0	0	0	0	0
0	1	0	0	0	1	0	0	0	0	0
0	1	1	0	0	0	1	0	0	0	0
1	0	0	0	0	0	0	1	0	0	0
1	0	1	0	0	0	0	0	1	0	0
1	1	0	0	0	0	0	0	0	1	0
1	1	1	0	0	0	0	0	0	0	1

2. Encoder:

An ecoder is a combinational logic circuit that essentially performs a 'reverse' of decoder function. The process of converting from familiar symbols or numbers to a coded format is called encoding.

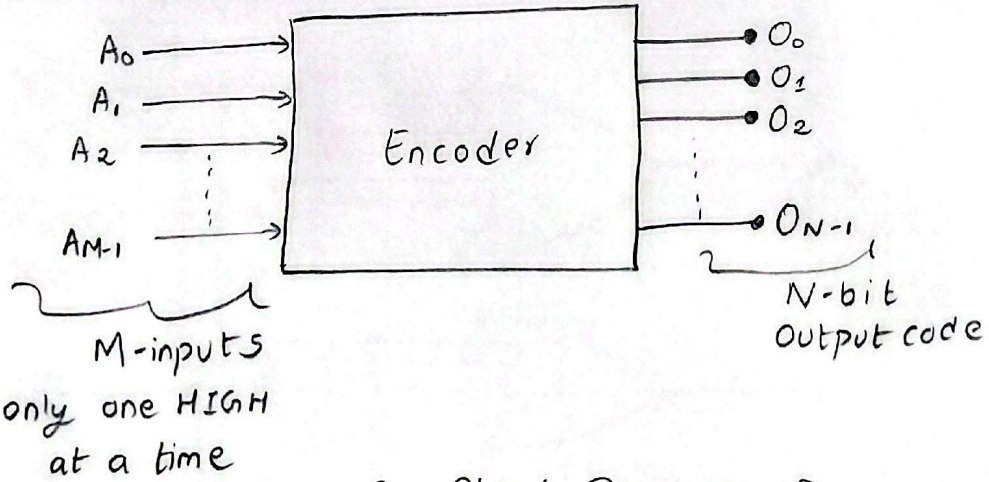

fig. Block Diagram of Encoder

Truth Table:

Y_7	Y_6	Y_5	Y_4	Y_3	Y_2	Y_1	Y_0	A_2	A_1	A_0
0	0	0	0	0	0	0	1	0	0	0
0	0	0	0	0	0	1	0	0	0	1
0	0	0	0	0	1	0	0	0	1	0
0	0	0	0	1	0	0	0	0	1	1
0	0	0	1	0	0	0	0	1	0	0
0	0	1	0	0	0	0	0	1	0	1
0	1	0	0	0	0	0	0	1	1	0
1	0	0	0	0	0	0	0	1	1	1

From Truth Table, we can write Boolean functions for each output as:

$$A_2 = Y_7 + Y_6 + Y_5 + Y_4$$

$$A_1 = Y_7 + Y_6 + Y_3 + Y_2$$

$$A_0 = Y_7 + Y_5 + Y_3 + Y_1$$

Logic Diagram:

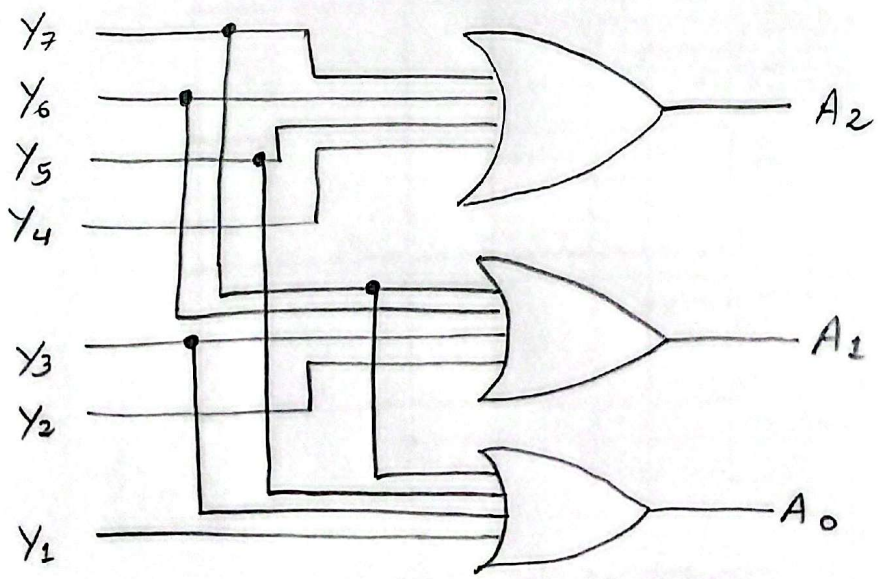

fig. 8 to 3 Encoder

Diagrams and Observations :

Objective 1 : Building a decoder circuit using NOT, AND Gates

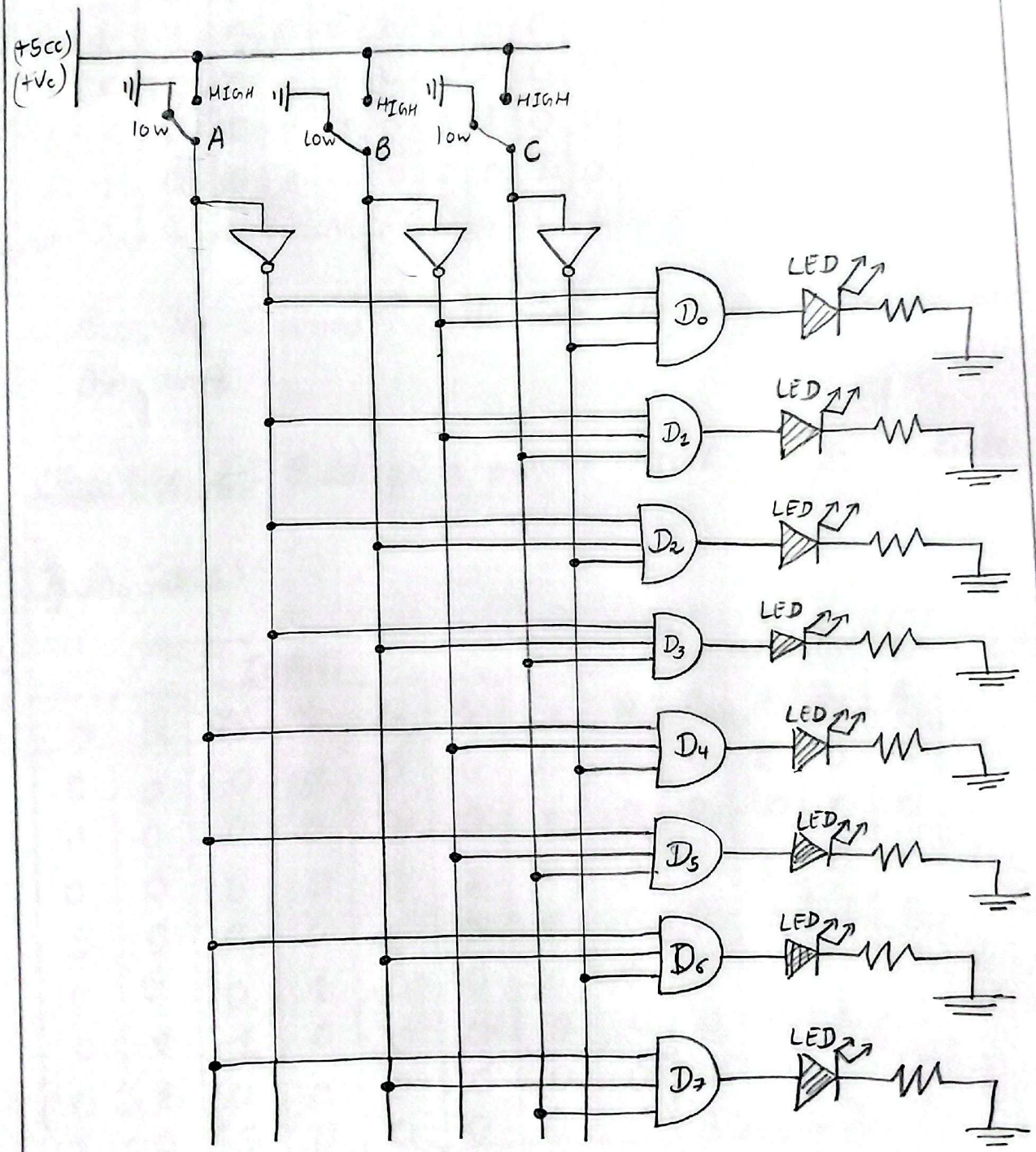

fig. 3-8 line decoder

Truth Table:

INPUTS			Expected Output								Observed Output							
A	B	C	D_0	D_1	D_2	D_3	D_4	D_5	D_6	D_7	D_0	D_1	D_2	D_3	D_4	D_5	D_6	D_7
0	0	0	1	0	0	0	0	0	0	0	1	0	0	0	0	0	0	0
0	0	1	0	1	0	0	0	0	0	0	0	1	0	0	0	0	0	0
0	1	0	0	0	1	0	0	0	0	0	0	0	1	0	0	0	0	0
0	1	1	0	0	0	1	0	0	0	0	0	0	0	1	0	0	0	0
1	0	0	0	0	0	0	1	0	0	0	0	0	0	0	1	0	0	0
1	0	1	0	0	0	0	0	1	0	0	0	0	0	0	0	1	0	0
1	1	0	0	0	0	0	0	0	1	0	0	0	0	0	0	0	1	0
1	1	1	0	0	0	0	0	0	0	1	0	0	0	0	0	0	0	1

Hence, The Observed results and the expected results are the same.

Objective 2: Building a encoder circuit using OR gate

Truth Table:

INPUTS								Expected Output			Observed Output		
Y_7	Y_6	Y_5	Y_4	Y_3	Y_2	Y_1	Y_0	A_2	A_1	A_0	A_2	A_1	A_0
0	0	0	0	0	0	0	1	0	0	0	0	0	0
0	0	0	0	0	0	1	0	0	0	1	0	0	1
0	0	0	0	0	1	0	0	0	1	0	0	1	0
0	0	0	0	1	0	0	0	0	1	1	0	1	1
0	0	0	1	0	0	0	0	1	0	0	1	0	0
0	0	1	0	0	0	0	0	1	0	1	1	0	1
0	1	0	0	0	0	0	0	1	1	0	1	1	0
1	0	0	0	0	0	0	0	1	1	1	1	1	1

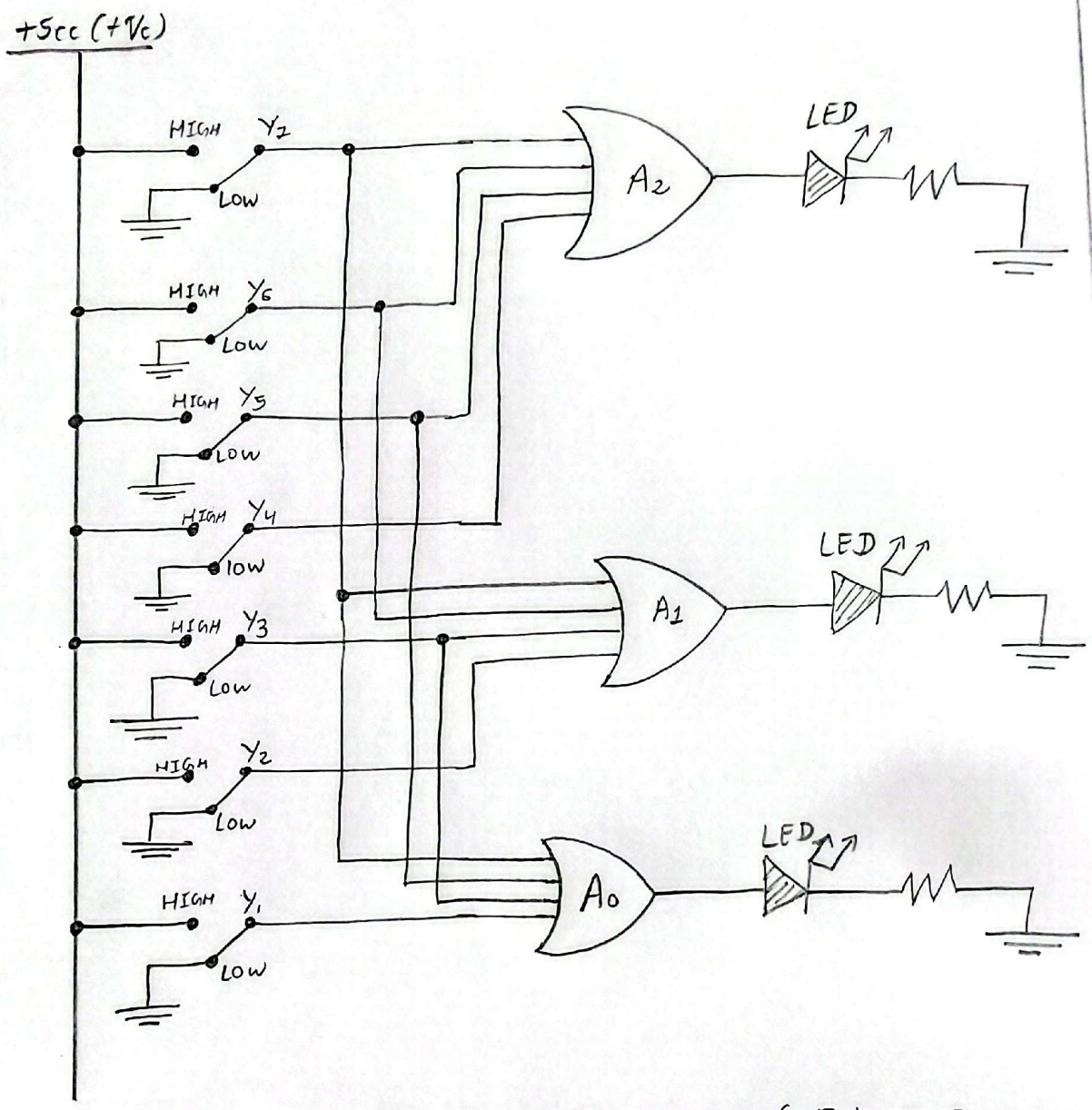

fig. Circuit Diagram of 8 to 3 Encoder

Hence, The Observed and expected results are the same.

Discussion and Conclusion :

In this lab session, we verified the functionality of Encoder and Decoder circuits using different logic gates and truth tables.